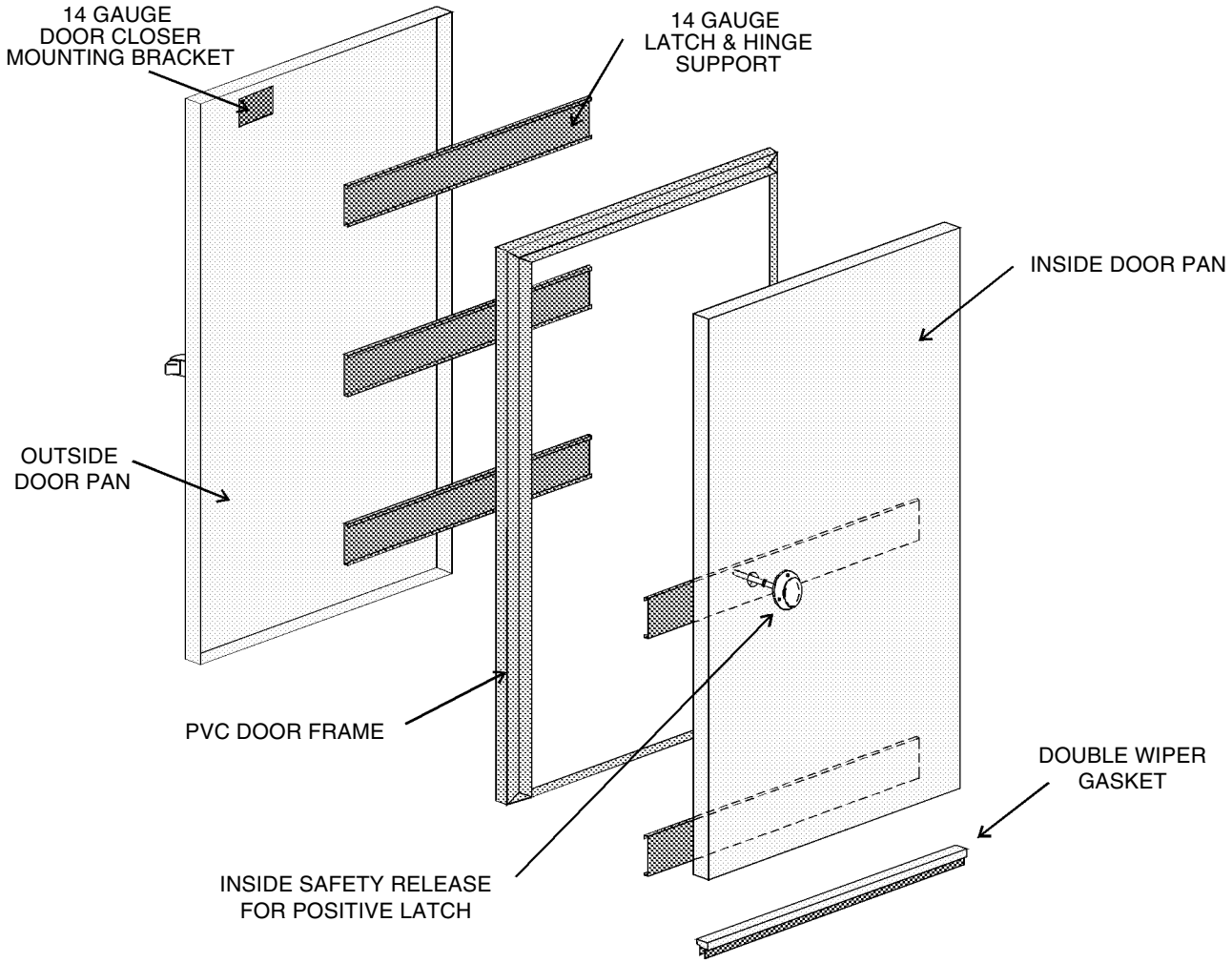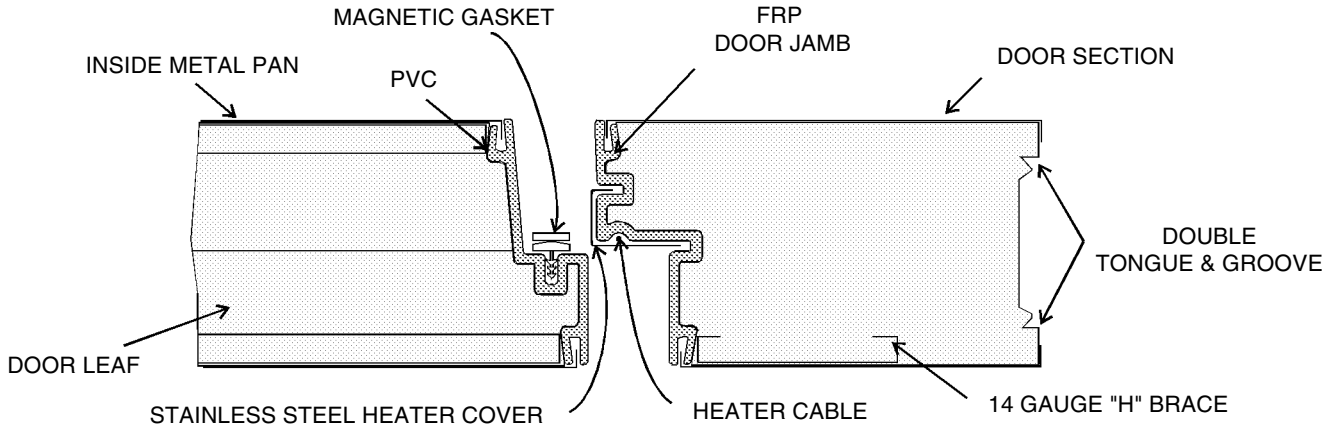Door Leaf Construction